Hillmar
Hillmar Industries Ltd.
7371 Vantage Way
Delta, BC V4G 1C9
P:604 946-7115 F:604 946-0329
info@hillmar.com www.hillmar.com

RAIL CLAMP RPTM050
CTHV-LH-300-050-W10-RP
SPECIFICATION SHEET
SLS & MKTG
ENGLISH

Sheet Number:			
Job Number:			
Form Number: 229-107-40860PT			
Company / Project Reference:	Date.:	Page.: 1 OF 1	Document Package No.: / Rev.:

Inventor Drawing

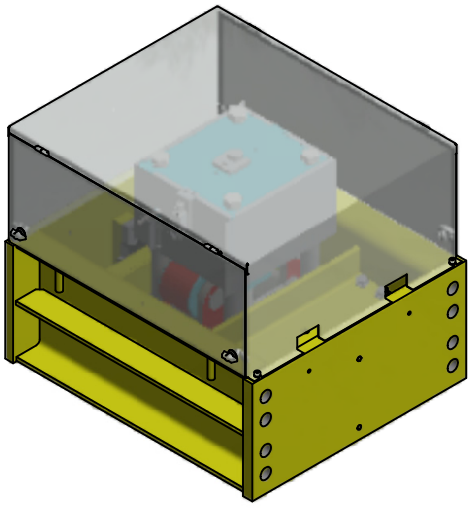

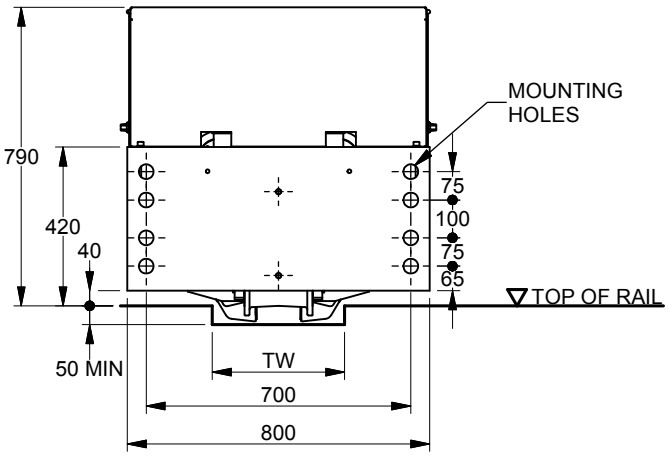

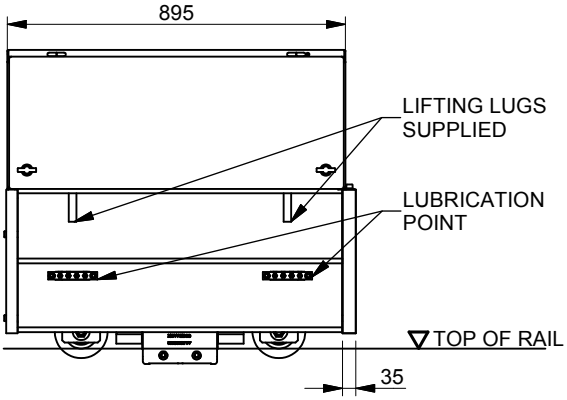

FEATURE	CODE
Rail Clamp type	CTHV-LH
Holding force	300
Coeficient of friction	050
Wedge	W10
No power unit	RP

Example for ordering	CTHV-LH-300-050-W10-RP

TECHNICAL DATA

Nominal holding force (kN)	300
Standard release pressure (MPa)	10.3
Maximum operating pressure (Mpa)	11.75
Cylinder volume (full stroke) (cm3)	633
Cylinder volume (working stroke) (cm3)	559
Mounting holes	8 x Ø39
Mounting bolts	8 x M 36 CL 8.8
Approximate weight (kg)	900
Mechanism - horizontal float (mm)	±25
Mechanism - vertical float (mm)	±25
Hydraulic connection	-6 37° JIC
Shipping crate (L x W x H) (mm)	1200 x 1000 x 1000

NOMINAL SPECIFICATION

Spring set - Hydraulically released device.

Control voltage electrical junction box connection to be drilled to suit requirements by customer.

RAIL WIDTH (mm)	MINIMUM TROUGH WIDTH TW (mm)
71 - 95	315
96 - 119	350
120 - 135	360
136 - 150	380

NOTES

All figures are nominal figures only.

All dimensions are in millimeters.

Document Template #710-101-62058

** ALL TECHNICAL DATA IS SUBJECT TO CHANGE WITHOUT NOTICE **
Hillmar works have a fully registered ISO 9001-2008 quality assurance programme (QCB #01-1525)

C:\TEMP\20193 7e5-fc1a-4b77-85fc-d25b854f409a\80000524171\HILLMAR\HILLMAR PRODUCTION\02 STORM BRAKES\0700-2\07002001 CXHV-LH\SPC-SHT-CXHV-LH\03 CTHV-XX-XXX-050-RP\40860 CTHV-LH-300-050-W10-RP.idw